ema

Sensors
switches and controller
catalogue

- Stable Operation: Without mechanical components, proximity sensors do not be affected by the qualities of mediums and the variation of density, and it can work immediately after installation
- Variable outputs and user-friendly operation
- Display: LED
- Power protection: overload, short-circuit, reverse polarity

IP67 CE RoHS

Order information

Order No.	Size (mm)	Material	Sensing range (mm)	Electric design	Output	Supply voltage (V)	Load current (mA)	Connection	Drawing No.
CA0001	M18 x 80	PBT+GF	8 nf	2 Wire	NO	20~250 AC/DC	250	2M, PVC	eC01
CA0002	M18 x 80	PBT+GF	8 nf	2 Wire	NC	20~250 AC/DC	250	2M, PVC	eC01
CA0003	M18 x 80	PP+GF	8 nf	3 Wire	NPN NO	10~36 DC	250	2M, PVC	eC01
CA0004	M18 x 80	PBT+GF	8 nf	3 Wire	PNP NO	10~36 DC	250	2M, PVC	eC01
CA0005	M18 x 80	PBT+GF	8 nf	3 Wire	PNP NC	10~36 DC	250	2M, PVC	eC01
CA0006	M18 x 80	PBT+GF	8 nf	3 Wire	NPN NO	10~36 DC	250	2M, PVC	eC01
CA0007	M18 x 80	PBT+GF	8 nf	3 Wire	NPN NC	10~36 DC	250	2M, PVC	eC01
CA0008	M18 x 80	PBT+GF	8 nf	2 Wire	NO/NC	10~36 DC	250	2M, PVC	eC01
CC0001	∅34 x 80	PBT+GF	20 nf	2 Wire	NO	20~250 AC/DC	250	2M, PVC	eC04
CC0002	∅34 x 80	PBT+GF	20 nf	2 Wire	NC	20~250 AC/DC	250	2M, PVC	eC04
CC0003	∅34 x 80	PBT+GF	20 nf	2 Wire	NO/NC	20~250 AC/DC	250	2M, PVC	eC04
CC0004	∅34 x 80	PBT+GF	20 nf	3 Wire	PNP NO	10~36 DC	250	2M, PVC	eC04
CC0005	∅34 x 80	PBT+GF	20 nf	3 Wire	PNP NC	10~36 DC	250	2M, PVC	eC04
CC0006	∅34 x 80	PBT+GF	20 nf	3 Wire	NPN NO	10~36 DC	250	2M, PVC	eC04
CC0007	∅34 x 80	PBT+GF	20 nf	3 Wire	NPN NC	10~36 DC	250	2M, PVC	eC04
CC0008	∅34 x 80	PBT+GF	20 nf	2 Wire	NO/NC	10~36 DC	250	2M, PVC	eC04
CC0009	∅34 x 80	PBT+GF	20 nf	2 Wire	NO	20~250 AC/DC	250	M12 Socket	eC05
CC0010	∅34 x 80	PBT+GF	20 nf	2 Wire	NC	20~250 AC/DC	250	M12 Socket	eC05
CC0011	∅34 x 80	PBT+GF	20 nf	2 Wire	NO/NC	20~250 AC/DC	250	M12 Socket	eC05
CC0012	∅34 x 80	PBT+GF	20 nf	3 Wire	PNP NO	10~36 DC	250	M12 Socket	eC05
CC0013	∅34 x 80	PBT+GF	20 nf	3 Wire	PNP NC	10~36 DC	250	M12 Socket	eC05
CC0014	∅34 x 80	PBT+GF	20 nf	3 Wire	NPN NO	10~36 DC	250	M12 Socket	eC05
CC0015	∅34 x 80	PBT+GF	20 nf	3 Wire	NPN NC	10~36 DC	250	M12 Socket	eC05
CC0016	∅34 x 80	PBT+GF	20 nf	2 Wire	NO/NC	10~36 DC	250	M12 Socket	eC05

Notice: f=flush mounting, nf=non-flush mounting.

CD type One-Touch capacitive level sensors

- Smart capacitive level sensor features with automatic learning and remote setting
- Flat rectangular housing, space saving, easy installation
- Enhance resistance to electromagnetic interference
- Whole-sealed design, reliable operation, long-term stability even in worse applications
- Output: PNP, NPN
- Power protection: overload, short-circuit, reverse polarity

IP67 CE RoHS

Drawings

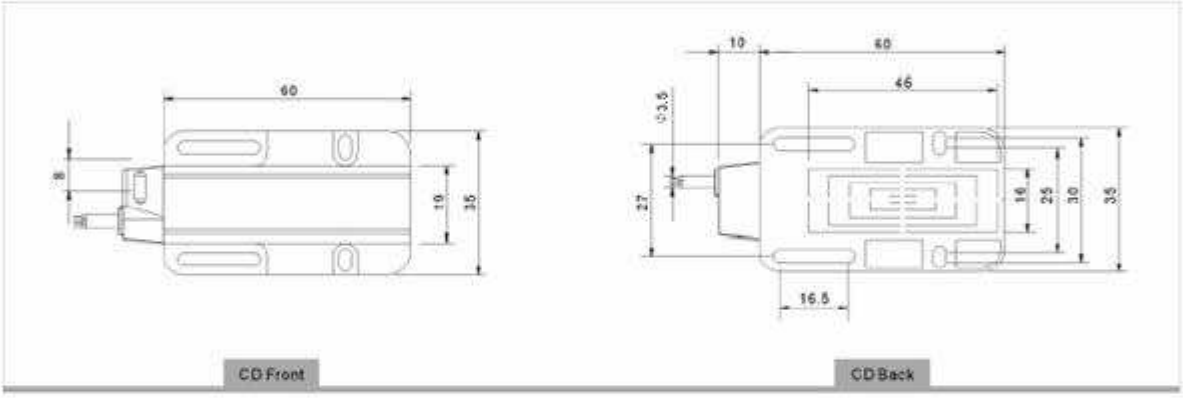

Order Information

Order No.	Size (mm)	Material	Sensing range (mm)	Electric design	Output	Supply voltage (V)	Load current (mA)	Connection
CD0001	35 x 70	PA+GF	15 nf	4 Wire	PNP NO / NC	10~36VDC	150	2M, PVC
CD0002	35 x 70	PA+GF	15 nf	4 Wire	NPN NO / NC	10~36VDC	150	2M, PVC

Notice: nf=non-flush mounting.

Float level switches

- Simple construction, concise design
- Reliable operation, and long lifetime up to two millions times
- Anticorrosive, resistance to acid

Side-mounted float level switches

- Reliable operation and long lifetime
- Anticorrosive, resistance to acid
- Resistance to electromagnetic interference
- Stainless steel

IP68 CE RoHS

Order Information

	Float level switches			Side-mounted float level switches	
Order No.	LS0001	LS0002	LS0003	LS1001	LS1002
Type	Standard	High temperature	Strong acid / Alkali	Standard	Standard
Electrical design	AC / DC			AC / DC	
Output	NO / NC			NO / NC	
Operating voltage	MAX. 240V AC/200V DC			19~60VDC/14~250VAC	
Current rating	0.5A (240V AC/DC)			3(1)A/250VAC	
Socket	M18 thread			--	
Switch capacity	70W			--	
Sensing degree	± 30°			± 15°	
Ambient pressure	10 bar			10 bar	
Contact resistance	80 Ω			--	
Storage humidity	20%~70%			20%~70%	
Operating humidity	20%~70%			20%~70%	
Operating temperature	-20℃~80℃	-20℃~120℃	-20℃~100℃	-20℃~200℃	-20℃~200℃
Ambient temperature	-20℃~80℃	-20℃~120℃	-20℃~100℃	-20℃~200℃	-20℃~200℃
Housing material	PBT+30%GF	PA66+30%GF	PTFE+30%GF	Stainless steel 304	Stainless steel 316
Connection	1M PVC cable	1M PUR cable	1M PUR cable	1M PUR cable	1M PUR cable

Notice: PTFE is allowed to be used under the conditions with PH 0~14.

Order No.	0607F	0607X
Type	Flange	Fixture

Notice: applied for side-mounted float level switches only.

- Special shaft sealing for dust-proof
- Rotating torque can be adjustable
- Small and compact design for simple mounting
- Stainless steel mechanical parts and robust gear motor Lmakemaintenance free
- Easy installation at container
- Suitable to detect very light bulk solids

IP66 CE RoHS

Order Information

SR	1000	B	220	T1	F
Series	Standard type	110~120VAC	220mm	100x30(WxH)	Flange

SR	Series: SR			
1000	Fork type: 1000: Standard 2000: High temperature	3000: Standard type with shaft-protection 4000: High temperature with shaft-protection		5000: Extention with cable
B	Power input: A: 24VAC	B: 110~120VAC	C: 220~240VAC	D: Customized
220	Shaft length 80: 80mm	220: 220mm	470: 470mm	S: Customized
T1	Paddle Dimension(mm) T1: 100 x 30(W x H) L2: 60 x 40(W x H)	T2: 80 x 30(W x H) N: 132 x 100 x 30	T3: 65 x 80(W x H) V: 120 x 65 x 40	L: 50 x 30(W x H)
F	Fitting F: Flange	C: Fixture		

Each item is included a hexangular nut. If you don't need fixture or flange, this blank could be clear

Order No.	0607F	0607X
Type	Flange	Fixture

Order No.	SR1000T1	SR1000T2	SR1000T3	SR1000L	SR1000L2	SR1000N	SR1000V
							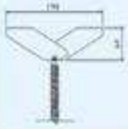
	100 x 30(W x H) Mounting hole on container > ∅ 90mm	80 x 30(W x H) Mounting hole on container > ∅ 70mm	65 x 80(W x H) Mounting hole on container > ∅ 90mm	50 x 30(W x H) Available at heavy bulk solid to avoid the shock on paddle	60 x 40(W x H) Available at heavy bulk solid to avoid the shock on paddle	132 x 100 x 30 Mounting on 1" screw hole without flange	120 x 65 X 40 Mounting hole on container > ∅ 50mm
Type	T1	T2	T3	L	L2	N	V

- Thorough metal construction switches are sturdy and durable
- No calibration necessary, user friendly handling
- Large vibrating range and the amplitude up to 8mm for the weak sticky materials hanging on the fork
- Adjustable amplitude for distinguishing from the density of different substances
- Ultra red LED offers an immediate warning for on-site detection
- Suitable for measurement of level of liquid, particulate and dense materials

IP67 CE OIL RoHS

Order Information

VR	1	02K	33	2	S	T
Series	VR1000	2000mm	20~60VDC	Flange	Standard	Teflon

VR	Series: VR
1	Fork type: 1: VR1000 L=240 mm 2: VR2000 Extention, L=300mm~4000mm 3: VR3000 Extention with cable, L=700mm~20000mm 4: VR4000 Mini, L=127mm (for liquid) 5: VR5000 Mini, L=127mm (for solid)
02K	Fork length: For VR 1000 & VR 4000, this blank is 000. For VR 2000 & VR 3000, this blank should be filled in according to the length of the switches. It should be displayed by K if the length is over 1000mm. (EX 1000mm=01K, 2500mm=2K5)
33	Power input and Output mode 11: 20~60VDC & 20~250VAC 50~60Hz (Relay output SPDT 4A/250VAC or 4A/60VDC) 22: 24VDC ± 10%(4~20mA & 0-10VDC output) 33: 20~60VDC(NPN & PNP output)
2	Mounting method: 1: G1-1/2"-n11 thread for VR1000~VR3000 2: Flange(thread for VR1000~VR3000) 3: Fixture(thread for VR1000~VR3000) 4: G1 thread for VR4000 / VR5000 5: 3/4"NPT thread for VR1000
S	Protection type: S: Standard
T	Fork materials: 4: 304 stainless steel - for week acidic or alkali substances 6: 316 stainless steel - for hygienic or foodstuff substances T: Stainless steel with Teflon - for strong acidic or alkali substances

Order No.	0607F	0607X	0608F	0608X
Type	Flange	Fixture	Flange	Fixture

Notice: 0608F, 0608X are applied for VR4000 / VR5000 only.

- Programmable flow sensor. User can set the flow range and the warning signal discretionarily
- Sensible substance: gas, liquid
- Display: LED
- Power protection: overload, short-circuit, reverse polarity
- Operating temperature: -25℃~80℃

IP67 CE Oil RoHS

Order information

Order No.	Thread	Housing material	Sensible range liquid (cm/s)	Sensible range gas (cm/s)	Output	Operating voltage (v)	Drawing No.
FL0001	M18 x 1.5	Plastics	3~300	200~3000	PNP NO / NC	20~36 DC	eF01
FL0002	M18 x 1.5	Plastics	3~300	200~3000	NPN NO / NC	20~36 DC	eF01
FL0003	M18 x 1.5	Aluminum Alloy	3~300	200~3000	Relay NO / NC	85~265 AC	eF02

- Programmable flow and temperature sensor. User can easily set the flow and temperature range as well as output the warning signal separately
- Visual indication makes the control of this sensor easier
- Sensible substance: gas, liquid
- Display: LED
- Power protection: overload, short-circuit, reverse polarity
- Operating temperature: -25℃~80℃
- Sensing temperature: -25℃~80℃

IP67 CE Oil RoHS

Order information

Order No.	Thread	Housing material	Sensible range liquid (cm/s)	Sensible range gas (cm/s)	Output	Operating voltage (V)	Drawing No.
FL0004	M18 x 1.5	Aluminum Alloy	3~300	200~3000	2 x PNP NO / NC	20~36 DC	eF02
FL0005	M18 x 1.5	Aluminum Alloy	3~300	200~3000	2 x NPN NO / NC	20~36 DC	eF02
FL0006	M18 x 1.5	Aluminum Alloy	3~300	200~3000	2 x Relay NO / NC	85~265 AC	eF02

- Made of stainless steel. Concise structure and reliable operation
- High accuracy, high stability
- Sensible substance: gas, liquid
- Power protection: overload, short-circuit, reverse polarity
- Operating temperature: -25℃~80℃

IP67 CE RoHS

Order information

Order No.	Thread	Housing material	Sensible range liquid (cm/s)	Sensible range gas (cm/s)	Output	Operating voltage (V)	Drawing No.
FL0007	G1/2"	Stainless Steel	3~60	200~800	PNP NO / NC	20~36 DC	eF03
FL0008	G1/2"	Stainless Steel	3~60	200~800	NPN NO / NC	20~36 DC	eF03
FL0009	NPT1/2	Stainless Steel	3~60	200~800	PNP NO / NC	20~36 DC	eF03
FL0010	NPT1/2	Stainless Steel	3~60	200~800	NPN NO / NC	20~36 DC	eF03

Order No.	US0001	US0002	US0003	US0007
Type	M18 x 1.5 - M12 x 1	M18 x 1.5 - G1/4"	M18 x1.5 - G1/2"	M18 x1.5 - ∅24mm
Drawing No.	eF06	eF07	eF08	eF09

- Programmable pressure sensor. User can set the pressure range and the warning signal discretionarily. Offering 4 units of pressure, Bar, Kg/cm^2, Mpa, and PSI, to be converted
- Display: LED
- Power protection: overload, short-circuit, reverse polarity
- High accuracy, high stability, and anticorrosive

IP67 CE RoHS

Order information

Order No.	Display	Thread	Sensing range (bar)	Electric design	Input voltage (V)	Output 1	Output 2	Drawing No.
PA1101	7 LED	G1/4"	2	4 Wire	18~36 DC	PNP NO / NC, NPN NO / NC	0~10V, 4~20mA	eP01
PA1102	7 LED	G1/4"	5	4 Wire	18~36 DC	PNP NO / NC, NPN NO / NC	0~10V, 4~20mA	eP01
PA1103	7 LED	G1/4"	10	4 Wire	18~36 DC	PNP NO / NC, NPN NO / NC	0~10V, 4~20mA	eP01
PA1104	7 LED	G1/4"	20	4 Wire	18~36 DC	PNP NO / NC, NPN NO / NC	0~10V, 4~20mA	eP01
PA1105	7 LED	G1/4"	50	4 Wire	18~36 DC	PNP NO / NC, NPN NO / NC	0~10V, 4~20mA	eP01
PA1106	7 LED	G1/4"	100	4 Wire	18~36 DC	PNP NO / NC, NPN NO / NC	0~10V, 4~20mA	eP01
PA1107	7 LED	G1/4"	200	4 Wire	18~36 DC	PNP NO / NC, NPN NO / NC	0~10V, 4~20mA	eP01
PA1108	7 LED	G1/4"	400	4 Wire	18~36 DC	PNP NO / NC, NPN NO / NC	0~10V, 4~20mA	eP01

Order No.	US0004	US0005	US0006
Type	G1/4" - G1/2"	G1/4" - G1/4"	G1/4" - M20 x 1.5
Drawing No.	eP05	eP06	eP07

- Concise structure
- Power protection: overload, short-circuit, reverse polarity
- High accuracy, high stability, and strong resistance to shock
- Sensible substance: gas, liquid, steam pressure

IP67 CE RoHS

- Programmable temperature sensors. User can set the temperature range and warning signal discretionarily. offering 2 units of temperature, °C and °F, to be converted
- Visual indication makes the control of this sensor easier
- Sensible substance: gas, liquid
- Sensing temperature: -40℃~150℃
- Display: LED
- Power protection: overload, short-circuit, reverse polarity

IP67 CE RoHS

Order information

Order No.	Display	Thread	Electric design	Input voltage (V)	Output 1	Output 2	Drawing No.
TA1001	7 LED	M18 x 1.5	4 Wire	18~36DC	PNPNO/NC NPNNO/NC	0~10V, 4~20mA	eT01

Order No.	US0001	US0002	US0003	US0007
Type	M18 x 1.5 - M12 x 1	M18 x 1.5 - G1/4"	M18 x1.5 - G1/2"	M18 x1.5 - ⌀24mm
Drawing No.	eF06	eF07	eF08	eF09

- Concise structure
- High accuracy, high stability, and resistant to interference
- Sensible substance: gas, liquid
- Power protection: overload, short-circuit, reverse polarity
- Sensing temperature: -40℃~+150℃

IP67 CE RoHS

Order information

Order No.	Display	Thread	Electric design	Input voltage (V)	Output	Drawing No.
TC0001	No	G1/2"	4 Wire	18~36 DC	4~20mA	eT02
TC0002	No	G1/2"	4 Wire	18~36 DC	0~10V	eT02

- A variety of size and of outputs
- Easy installation
- Variable outputs and user-friendly operation
- Display: LED
- Power protection: reverse polarity

IP67 CE RoHS

Order information

Order No.	Size (mm)	Material	Sensing range (mm)	Electric design	Status	Output	Supply voltage (V)	Load current (mA)	Connection	Drawing No.
IA0001	M8 x 40	Brass	1 f	2 Wire	NO/NC	PNP/NPN	10~36 DC	200	2M, PVC	el02
IA0002	M8 x 40	Brass	1 f	2 Wire	NO	PNP/NPN	10~36 DC	200	2M, PVC	el02
IA0003	M8 x 40	Brass	1 f	2 Wire	NC	PNP/NPN	10~36 DC	200	2M, PVC	el02
IA0004	M8 x 40	Brass	2 nf	2 Wire	NO/NC	PNP/NPN	10~36 DC	200	2M, PVC	el01
IA0005	M8 x 40	Brass	2 nf	2 Wire	NO	PNP/NPN	10~36 DC	200	2M, PVC	el01
IA0006	M8 x 40	Brass	2 nf	2 Wire	NC	PNP/NPN	10~36 DC	200	2M, PVC	el01
IA0007	M8 x 40	Brass	1 f	3 Wire	NC	PNP	10~36 DC	200	2M, PVC	el02
IA0008	M8 x 40	Brass	1 f	3 Wire	NO	NPN	10~36 DC	200	2M, PVC	el02
IA0009	M8 x 40	Brass	1 f	3 Wire	NO	PNP	10~36 DC	200	2M, PVC	el02
IA0010	M8 x 40	Brass	1 f	3 Wire	NC	NPN	10~36 DC	200	2M, PVC	el02
IA0011	M8 x 40	Brass	2 nf	3 Wire	NC	PNP	10~36 DC	200	2M, PVC	el01
IA0012	M8 x 40	Brass	2 nf	3 Wire	NO	NPN	10~36 DC	200	2M, PVC	el01
IA0013	M8 x 40	Brass	1 f	3 Wire	NO	PNP	10~36 DC	200	2M, PVC	el02
IA0014	M8 x 40	Brass	2 nf	3 Wire	NC	PNP	10~36 DC	200	2M, PVC	el01
IA0015	M8 x 40	Brass	2 nf	3 Wire	NC	NPN	10~36 DC	200	2M, PVC	el01
IA0016	M8 x 40	Brass	1 f	2 Wire	NO/NC	PNP/NPN	5~36 DC	200	2M, PVC	el02
IA0044	M8 x 40	Brass	1 f	2 Wire	NO/NC	PNP/NPN	10~36 DC	200	2M, PUR	el02

Order information

Order No.	Size (mm)	Material	Sensing range (mm)	Electric design	Status	Output	Supply voltage (V)	Load current (mA)	Connection	Drawing No.
IA0030	M8 x 60	Brass	1 f	2 Wire	NO/NC	PNP/NPN	10~36 DC	200	M12 Socket	el04
IA0031	M8 x 60	Brass	1 f	2 Wire	NO	PNP/NPN	10~36 DC	200	M12 Socket	el04
IA0032	M8 x 60	Brass	1 f	2 Wire	NC	PNP/NPN	10~36 DC	200	M12 Socket	el04
IA0033	M8 x 60	Brass	2 nf	2 Wire	NO/NC	PNP/NPN	10~36 DC	200	M12 Socket	el03
IA0034	M8 x 60	Brass	2 nf	2 Wire	NO	PNP/NPN	10~36 DC	200	M12 Socket	el03
IA0035	M8 x 60	Brass	2 nf	2 Wire	NC	PNP/NPN	10~36 DC	200	M12 Socket	el03
IA0036	M8 x 60	Brass	1 f	3 Wire	NO	PNP	10~36 DC	200	M12 Socket	el04
IA0037	M8 x 60	Brass	1 f	3 Wire	NO	NPN	10~36 DC	200	M12 Socket	el04
IA0038	M8 x 60	Brass	1 f	3 Wire	NC	PNP	10~36 DC	200	M12 Socket	el04
IA0039	M8 x 60	Brass	1 f	3 Wire	NC	NPN	10~36 DC	200	M12 Socket	el04
IA0040	M8 x 60	Brass	2 nf	3 Wire	NO	PNP	10~36 DC	200	M12 Socket	el03
IA0041	M8 x 60	Brass	2 nf	3 Wire	NO	NPN	10~36 DC	200	M12 Socket	el03
IA0042	M8 x 60	Brass	2 nf	3 Wire	NC	PNP	10~36 DC	200	M12 Socket	el03
IA0043	M8 x 60	Brass	2 nf	3 Wire	NC	NPN	10~36 DC	200	M12 Socket	el03
IB0001	M12 x 50	Brass	2 f	2 Wire	NO/NC	PNP/NPN	10~36 DC	250	2M, PVC	el06
IB0002	M12 x 50	Brass	2 f	2 Wire	NO	PNP/NPN	10~36 DC	250	2M, PVC	el06
IB0003	M12 x 50	Brass	2 f	2 Wire	NC	PNP/NPN	10~36 DC	250	2M, PVC	el06
IB0004	M12 x 50	Brass	4 nf	2 Wire	NO/NC	PNP/NPN	10~36 DC	250	2M, PVC	el05
IB0005	M12 x 50	Brass	4 nf	2 Wire	NO	PNP/NPN	10~36 DC	250	2M, PVC	el05
IB0006	M12 x 50	Brass	4 nf	2 Wire	NC	PNP/NPN	10~36 DC	250	2M, PVC	el05
IB0007	M12 x 50	Brass	2 f	3 Wire	NO	PNP	10~36 DC	250	2M, PVC	el06
IB0008	M12 x 50	Brass	2 f	3 Wire	NO	NPN	10~36 DC	250	2M, PVC	el06
IB0009	M12 x 50	Brass	2 f	3 Wire	NC	PNP	10~36 DC	250	2M, PVC	el06
IB0010	M12 x 50	Brass	2 f	3 Wire	NC	NPN	10~36 DC	250	2M, PVC	el06
IB0011	M12 x 50	Brass	4 nf	3 Wire	NO	PNP	10~36 DC	250	2M, PVC	el05
IB0012	M12 x 50	Brass	4 nf	3 Wire	NO	NPN	10~36 DC	250	2M, PVC	el05
IB0013	M12 x 50	Brass	4 nf	3 Wire	NC	PNP	10~36 DC	250	2M, PVC	el05
IB0014	M12 x 50	Brass	4 nf	3 Wire	NC	NPN	10~36 DC	250	2M, PVC	el05
IB0050	M12 x 50	Brass	4 nf	2 Wire	NO/NC	PNP/NPN	10~36 DC	250	2M, PVC	el05
IB0051	M12 x 50	Brass	4 f	2 Wire	NO	PNP/NPN	10~36 DC	250	M12 Socket	el07
IB0052	M12 x 50	Brass	4 f	2 Wire	NC	PNP/NPN	10~36 DC	250	M12 Socket	el07

Order information

Order No.	Size (mm)	Material	Sensing range (mm)	Electric design	Status	Output	Supply voltage (V)	Load current (mA)	Connection	Drawing No.
IB0015	M12 x 60	Brass	2 f	2 Wire	NO/NC	PNP/NPN	10~36 DC	250	M12 Socket	el09
IB0016	M12 x 60	Brass	2 f	2 Wire	NO	PNP/NPN	10~36 DC	250	M12 Socket	el09
IB0017	M12 x 60	Brass	2 f	2 Wire	NC	PNP/NPN	10~36 DC	250	M12 Socket	el09
IB0018	M12 x 60	Brass	4 nf	2 Wire	NO/NC	PNP/NPN	10~36 DC	250	M12 Socket	el08
IB0019	M12 x 60	Brass	4 nf	2 Wire	NO	PNP/NPN	10~36 DC	250	M12 Socket	el08
IB0020	M12 x 60	Brass	4 nf	2 Wire	NC	PNP/NPN	10~36 DC	250	M12 Socket	el08
IB0021	M12 x 60	Brass	2 f	3 Wire	NC	PNP	10~36 DC	250	M12 Socket	el09
IB0022	M12 x 60	Brass	2 f	3 Wire	NC	NPN	10~36 DC	250	M12 Socket	el09
IB0023	M12 x 60	Brass	4 nf	3 Wire	NC	PNP	10~36 DC	250	M12 Socket	el08
IB0024	M12 x 60	Brass	4 nf	3 Wire	NC	NPN	10~36 DC	250	M12 Socket	el08
IB0035	M12 x 60	Brass	2 f	3 Wire	NO	PNP	10~36 DC	250	M12 Socket	el09
IB0036	M12 x 60	Brass	2 f	3 Wire	NO	NPN	10~36 DC	250	M12 Socket	el09
IB0039	M12 x 60	Brass	4 nf	3 Wire	NO	PNP	10~36 DC	250	M12 Socket	el08
IB0040	M12 x 60	Brass	4 nf	3 Wire	NO	NPN	10~36 DC	250	M12 Socket	el08
IB0041	M12 x 40	Brass	4 f	3 Wire	NO	PNP	10~36 DC	250	3M, PVC	el11
IB0042	M12 x 40	Brass	4 f	3 Wire	NO	NPN	10~36 DC	250	3M, PVC	el11
IB0043	M12 x 40	Brass	4 f	3 Wire	NC	PNP	10~36 DC	250	3M, PVC	el11
IB0044	M12 x 40	Brass	4 f	3 Wire	NC	NPN	10~36 DC	250	3M, PVC	el11
IB0045	M12 x 40	Brass	6 nf	3 Wire	NO	PNP	10~36 DC	250	2M, PVC	el10
IB0046	M12 x 40	Brass	6 nf	3 Wire	NO	NPN	10~36 DC	250	2M, PVC	el10
IB0047	M12 x 40	Brass	6 nf	3 Wire	NC	PNP	10~36 DC	250	2M, PVC	el10
IB0048	M12 x 40	Brass	6 nf	3 Wire	NC	NPN	10~36 DC	250	2M, PVC	el10
IB0049	M12 x 40	Brass	6 nf	2 Wire	NO	PNP/NPN	10~36 DC	250	2M, PVC	el10
IC0001	M18 x 80	PBT+GF	5 f	3 Wire	NO	PNP	10~36 DC	250	2M, PVC	el12
IC0002	M18 x 80	PBT+GF	5 f	3 Wire	NO	NPN	10~36 DC	250	2M, PVC	el12
IC0003	M18 x 80	PBT+GF	5 f	3 Wire	NC	PNP	10~36 DC	250	2M, PVC	el12
IC0004	M18 x 80	PBT+GF	5 f	3 Wire	NC	NPN	10~36 DC	250	2M, PVC	el12
IC0005	M18 x 80	PBT+GF	10 nf	3 Wire	NO	PNP	10~36 DC	250	2M, PVC	el12
IC0006	M18 x 80	PBT+GF	10 nf	3 Wire	NO	NPN	10~36 DC	250	2M, PVC	el12
IC0007	M18 x 80	PBT+GF	10 nf	3 Wire	NC	PNP	10~36 DC	250	2M, PVC	el12
IC0008	M18 x 80	PBT+GF	10 nf	3 Wire	NC	NPN	10~36 DC	250	2M, PVC	el12
IC0017	M18 x 80	PBT+GF	5 f	3 Wire	NO	--	20~250 AC/DC	250	2M, PVC	el12

Order information

Order No.	Size (mm)	Material	Sensing range (mm)	Electric design	Status	Output	Supply voltage (V)	Load current (mA)	Connection	Drawing No.
IC0018	M18 x 80	PBT+GF	5 f	2 Wire	NC	--	20~250 AC/DC	250	2M, PVC	el12
IC0019	M18 x 80	PBT+GF	10 nf	2 Wire	NO	--	20~250 AC/DC	250	2M, PVC	el12
IC0020	M18 x 80	PBT+GF	10 nf	2 Wire	NC	--	20~250 AC/DC	250	2M, PVC	el12
IC0023	M18 x 80	PBT+GF	10 nf	2 Wire	NO	--	20~250 AC/DC	250	6M, PVC	el12
IC0009	M18 x 93	PBT+GF	5 f	3 Wire	NO	PNP	10~36 DC	250	M12 Socket	el13
IC0010	M18 x 93	PBT+GF	5 f	3 Wire	NO	NPN	10~36 DC	250	M12 Socket	el13
IC0011	M18 x 93	PBT+GF	5 f	3 Wire	NC	PNP	10~36 DC	250	M12 Socket	el13
IC0012	M18 x 93	PBT+GF	5 f	3 Wire	NC	NPN	10~36 DC	250	M12 Socket	el13
IC0013	M18 x 93	PBT+GF	10 nf	3 Wire	NO	PNP	10~36 DC	250	M12 Socket	el13
IC0014	M18 x 93	PBT+GF	10 nf	3 Wire	NO	NPN	10~36 DC	250	M12 Socket	el13
IC0015	M18 x 93	PBT+GF	10 nf	3 Wire	NC	PNP	10~36 DC	250	M12 Socket	el13
IC0016	M18 x 93	PBT+GF	10 nf	3 Wire	NC	NPN	10~36 DC	250	M12 Socket	el13
IC0021	M18 x 43	Brass	7 f	2 Wire	NO	PNP/NPN	10~36 DC	250	2M, PVC	el14
IC0022	M18 x 43	Brass	7 f	2 Wire	NC	PNP/NPN	10~36 DC	250	2M, PVC	el14
IC0026	M18 x 52	Brass	7 f	2 Wire	NO/NC	PNP/NPN	10~36 DC	250	M12 Socket	el15
ID0001	M30 x 50	Brass	10 f	3 Wire	NO	PNP	10~36 DC	250	2M, PVC	el17
ID0002	M30 x 50	Brass	10 f	3 Wire	NO	NPN	10~36 DC	250	2M, PVC	el17
ID0003	M30 x 50	Brass	10 f	3 Wire	NC	PNP	10~36 DC	250	2M, PVC	el17
ID0004	M30 x 50	Brass	10 f	3 Wire	NC	NPN	10~36 DC	250	2M, PVC	el17
ID0005	M30 x 50	Brass	15 nf	3 Wire	NO	PNP	10~36 DC	250	2M, PVC	el16
ID0006	M30 x 50	Brass	15 nf	3 Wire	NO	NPN	10~36 DC	250	2M, PVC	el16
ID0007	M30 x 50	Brass	15 nf	3 Wire	NC	PNP	10~36 DC	250	2M, PVC	el16
ID0008	M30 x 50	Brass	15 nf	3 Wire	NC	NPN	10~36 DC	250	2M, PVC	el16
ID0013	M30 x 50	Brass	10 f	2 Wire	NO	--	20~250 AC/DC	250	2M, PVC	el17
ID0014	M30 x 50	Brass	10 f	2 Wire	NC	--	20~250 AC/DC	250	2M, PVC	el17
ID0015	M30 x 50	Brass	15 nf	2 Wire	NO	--	20~250 AC/DC	250	2M, PVC	el16
ID0016	M30 x 50	Brass	15 nf	2 Wire	NC	--	20~250 AC/DC	250	2M, PVC	el16
ID0009	M30 x 60	Brass	10 f	3 Wire	NC	PNP	10~36 DC	250	M12 Socket	el19
ID0010	M30 x 60	Brass	10 f	3 Wire	NC	NPN	10~36 DC	250	M12 Socket	el19
ID0011	M30 x 60	Brass	15 nf	3 Wire	NC	PNP	10~36 DC	250	M12 Socket	el18
ID0012	M30 x 60	Brass	15 nf	3 Wire	NC	NPN	10~36 DC	250	M12 Socket	el18
ID0020	M30 x 60	Brass	20 nf	2 Wire	NO/NC	PNP/NPN	10~36 DC	250	M12 Socket	el18
ID0021	M30 x 60	Brass	15 f	3 Wire	NO	PNP	10~36 DC	250	M12 Socket	el19

Order information

Order No.	Size (mm)	Material	Sensing range (mm)	Electric design	Status	Output	Supply voltage (V)	Load current (mA)	Connection	Drawing No.
ID0035	M30 x 60	Brass	10 f	3 Wire	NO	PNP	10~36 DC	250	M12 Socket	el19
ID0036	M30 x 60	Brass	10 f	3 Wire	NO	NPN	10~36 DC	250	M12 Socket	el19
ID0039	M30 x 60	Brass	15 nf	3 Wire	NO	PNP	10~36 DC	250	M12 Socket	el18
ID0040	M30 x 60	Brass	15 nf	3 Wire	NO	NPN	10~36 DC	250	M12 Socket	el18
ID0017	M30 x 80	PBT+GF	15 nf	2 Wire	NO/NC	PNP/NPN	10~36 DC	250	2M, PVC	el20
ID0018	M30 x 80	PBT+GF	15 nf	2 Wire	NO	--	20~250 AC/DC	250	2M, PVC	el20
ID0019	M30 x 80	PBT+GF	15 nf	2 Wire	NC	--	20~250 AC/DC	250	2M, PVC	el20
ID0041	M30 x 93	Brass	15 nf	2 Wire	NO	--	20~250 AC/DC	250	5M, PUR	el21
ID0042	M30 x 93	Brass	12 f	2 Wire	NO	--	20~250 AC/DC	250	2M, PUR	el22

Notice: f=flush mounting, nf=non-flush mounting.
ID0041 and ID0042 is "High Temperature" type and resistance to operating temperature which is from -25℃ to 100℃.

Order information

Order No.	Size (mm)	Material	Sensing range (mm)	Electric design	Status	Output	Supply voltage (V)	Load current (mA)	Connection	Drawing No.
IE0001	∅ 34 x 80	PBT+GF	22 nf	3 Wire	NO	PNP	10~36 DC	350	2M, PVC	el24
IE0002	∅ 34 x 80	PBT+GF	22 nf	3 Wire	NO	NPN	10~36 DC	350	2M, PVC	el24
IE0003	∅ 34 x 80	PBT+GF	22 nf	3 Wire	NC	PNP	10~36 DC	350	2M, PVC	el24
IE0004	∅ 34 x 80	PBT+GF	22 nf	3 Wire	NC	NPN	10~36 DC	350	2M, PVC	el24
IE0009	∅ 34 x 80	PBT+GF	22 nf	3 Wire	NO	--	20~250 AC/DC	350	2M, PVC	el24
IE0010	∅ 34 x 80	PBT+GF	22 nf	2 Wire	NC	--	20~250 AC/DC	350	2M, PVC	el24
IE0011	∅ 34 x 80	PBT+GF	22 nf	2 Wire	NO	--	20~250 AC/DC	350	5M, PUR	el23
IE0012	∅ 34 x 80	PBT+GF	22 nf	2 Wire	NC	--	20~250 AC/DC	350	5M, PUR	el23
IE0013	∅ 34 x 80	PBT+GF	22 nf	2 Wire	NO	--	20~250 AC/DC	350	6M, PVC	el24
IE0005	∅ 34 x 93	PBT+GF	22 nf	3 Wire	NO	PNP	10~36 DC	350	M12 Socket	el25
IE0006	∅ 34 x 93	PBT+GF	22 nf	3 Wire	NO	NPN	10~36 DC	350	M12 Socket	el25
IE0007	∅ 34 x 93	PBT+GF	22 nf	3 Wire	NC	PNP	10~36 DC	350	M12 Socket	el25
IE0008	∅ 34 x 93	PBT+GF	22 nf	3 Wire	NC	NPN	10~36 DC	350	M12 Socket	el25

Notice: f=flush mounting, nf=non-flush mounting.
IE0011 and IE0012 is "High Temperature" type and resistance to operating temperature which is from -25℃ to 100℃.

- Output: light-on / dark-on programmable
- High sensing accuracy, quick response, and non-contact sensing
- Identify opaque light-reflecting objects
- Wide sensing range, and the beams only passed the sensing area once.
- Concise structure and small body

IP65 CE RoHS

Order information

Order No.	Function	Type of light	Material	Size (mm)	Sensing range (M)	Electric design	Output	Connection	Drawing No.
OA1201	Through-beam transmitter	Infrared	Brass	M12 x 80	4	2 Wire	--	with Cable	eO02
OA1202	Through-beam receiver	Infrared	Brass	M12 x 80	4	3 Wire	NPN NO/NC	with Cable	eO02
OA1203	Through-beam receiver	Infrared	Brass	M12 x 80	4	3 Wire	PNP NO/NC	with Cable	eO02
OA1204	Through-beam transmitter	Infrared	Brass	M12 x 90	4	2 Wire	--	Socket	eO01
OA1205	Through-beam receiver	Infrared	Brass	M12 x 90	4	3 Wire	PNP NO/NC	Socket	eO01
OA1206	Through-beam receiver	Infrared	Brass	M12 x 90	4	3 Wire	NPN NO/NC	Socket	eO01
OA1207	Through-beam transmitter	Infrared	PBT+GF	M12 x 80	4	2 Wire	--	with Cable	eO02
OA1208	Through-beam receiver	Infrared	PBT+GF	M12 x 80	4	3 Wire	NPN NO/NC	with Cable	eO02
OA1209	Through-beam receiver	Infrared	PBT+GF	M12 x 80	4	3 Wire	PNP NO/NC	with Cable	eO02
OA1210	Through-beam transmitter	Infrared	PBT+GF	M12 x 90	4	2 Wire	--	Socket	eO01
OA1211	Through-beam receiver	Infrared	PBT+GF	M12 x 90	4	3 Wire	PNP NO/NC	Socket	eO01
OA1212	Through-beam receiver	Infrared	PBT+GF	M12 x 90	4	3 Wire	NPN NO/NC	Socket	eO01
OA1301	Through-beam transmitter	Infrared	Brass	M18 x 80	15	2 Wire	--	with Cable	eO04
OA1302	Through-beam receiver	Infrared	Brass	M18 x 80	15	3 Wire	NPN NO/NC	with Cable	eO04
OA1303	Through-beam receiver	Infrared	Brass	M18 x 80	15	3 Wire	PNP NO/NC	with Cable	eO04
OA1304	Through-beam transmitter	Infrared	Brass	M18 x 95	15	2 Wire	--	Socket	eO03
OA1305	Through-beam receiver	Infrared	Brass	M18 x 95	15	3 Wire	PNP NO/NC	Socket	eO03
OA1306	Through-beam receiver	Infrared	Brass	M18 x 95	15	3 Wire	NPN NO/NC	Socket	eO03
OA1307	Through-beam transmitter	Infrared	PBT+GF	M18 x 80	15	2 Wire	--	with Cable	eO04
OA1308	Through-beam receiver	Infrared	PBT+GF	M18 x 80	15	3 Wire	NPN NO/NC	with Cable	eO04
OA1309	Through-beam receiver	Infrared	PBT+GF	M18 x 80	15	3 Wire	PNP NO/NC	with Cable	eO04

Order information

Order No.	Function	Type of light	Material	Size (mm)	Sensing range (M)	Electric design	Output	Connection	Drawing No.
OA1310	Through-beam transmitter	Infrared	PBT+GF	M18 x 95	15	2 Wire	--	Socket	eO03
OA1311	Through-beam receiver	Infrared	PBT+GF	M18 x 95	15	3 Wire	PNP NO/NC	Socket	eO03
OA1312	Through-beam receiver	Infrared	PBT+GF	M18 x 95	15	3 Wire	NPN NO/NC	Socket	eO03
OA1313	Through-beam receiver	Infrared	Brass	M18 x 80	15	4 Wire	PNP NO/NC NPN NO/NC	with Cable	eO04
OA1314	Through-beam receiver	Infrared	Brass	M18 x 95	15	4 Wire	PNP NO/NC NPN NO/NC	Socket	eO03
OA1315	Through-beam receiver	Infrared	PBT+GF	M18 x 80	15	4 Wire	PNP NO/NC NPN NO/NC	with Cable	eO04
OA1316	Through-beam receiver	Infrared	PBT+GF	M18 x 95	15	4 Wire	PNP NO/NC NPN NO/NC	Socket	eO03
OB1201	Retro-reflective	Infrared	Brass	M12 x 80	2	3 Wire	PNP NO/NC	with Cable	eO02
OB1202	Retro-reflective	Infrared	Brass	M12 x 80	2	3 Wire	NPN NO/NC	with Cable	eO02
OB1203	Retro-reflective	Infrared	Brass	M12 x 90	2	3 Wire	PNP NO/NC	Socket	eO01
OB1204	Retro-reflective	Infrared	Brass	M12 x 90	2	3 Wire	NPN NO/NC	Socket	eO01
OB1205	Retro-reflective	Infrared	PBT+GF	M12 x 80	2	3 Wire	PNP NO/NC	with Cable	eO02
OB1206	Retro-reflective	Infrared	PBT+GF	M12 x 80	2	3 Wire	NPN NO/NC	with Cable	eO02
OB1207	Retro-reflective	Infrared	PBT+GF	M12 x 90	2	3 Wire	PNP NO/NC	Socket	eO01
OB1208	Retro-reflective	Infrared	PBT+GF	M12 x 90	2	3 Wire	NPN NO/NC	Socket	eO01
OB1301	Retro-reflective	Infrared	Brass	M18 x 80	3	3 Wire	PNP NO/NC	with Cable	eO04
OB1302	Retro-reflective	Infrared	Brass	M18 x 80	3	3 Wire	NPN NO/NC	with Cable	eO04
OB1303	Retro-reflective	Infrared	Brass	M18 x 95	3	3 Wire	PNP NO/NC	Socket	eO03
OB1304	Retro-reflective	Infrared	Brass	M18 x 95	3	3 Wire	NPN NO/NC	Socket	eO03
OB1305	Retro-reflective	Infrared	PBT+GF	M18 x 80	3	3 Wire	PNP NO/NC	with Cable	eO04
OB1306	Retro-reflective	Infrared	PBT+GF	M18 x 80	3	3 Wire	NPN NO/NC	with Cable	eO04
OB1307	Retro-reflective	Infrared	PBT+GF	M18 x 95	3	3 Wire	PNP NO/NC	Socket	eO03
OB1308	Retro-reflective	Infrared	PBT+GF	M18 x 95	3	3 Wire	NPN NO/NC	Socket	eO03
OB1309	Retro-reflective	Infrared	Brass	M18 x 80	3	4 Wire	PNP NO/NC NPN NO/NC	with Cable	eO04
OB1310	Retro-reflective	Infrared	Brass	M18 x 95	3	4 Wire	PNP NO/NC NPN NO/NC	Socket	eO03
OB1311	Retro-reflective	Infrared	PBT+GF	M18 x 80	3	4 Wire	PNP NO/NC NPN NO/NC	with Cable	eO04
OB1312	Retro-reflective	Infrared	PBT+GF	M18 x 95	3	4 Wire	PNP NO/NC NPN NO/NC	Socket	eO03
OC1201	Diffuse-reflective	Infrared	Brass	M12 x 80	0.4	3 Wire	PNP NO/NC	with Cable	eO02
OC1202	Diffuse-reflective	Infrared	Brass	M12 x 80	0.4	3 Wire	NPN NO/NC	with Cable	eO02
OC1203	Diffuse-reflective	Infrared	Brass	M12 x 90	0.4	3 Wire	PNP NO/NC	Socket	eO01
OC1204	Diffuse-reflective	Infrared	Brass	M12 x 90	0.4	3 Wire	NPN NO/NC	Socket	eO01
OC1205	Diffuse-reflective	Infrared	PBT+GF	M12 x 80	0.4	3 Wire	PNP NO/NC	with Cable	eO02

Order information

Order No.	Function	Type of light	Material	Size (mm)	Sensing range (M)	Electric design	Output	Connection	Drawing No.
OC1206	Diffuse-reflective	Infrared	PBT+GF	M12 x 80	0.4	3 Wire	NPN NO/NC	with Cable	eO02
OC1207	Diffuse-reflective	Infrared	PBT+GF	M12 x 90	0.4	3 Wire	PNP NO/NC	Socket	eO01
OC1208	Diffuse-reflective	Infrared	PBT+GF	M12 x 90	0.4	3 Wire	NPN NO/NC	Socket	eO01
OC1301	Diffuse-reflective	Infrared	Brass	M18 x 80	0.6	3 Wire	PNP NO/NC	with Cable	eO04
OC1302	Diffuse-reflective	Infrared	Brass	M18 x 80	0.6	3 Wire	NPN NO/NC	with Cable	eO04
OC1303	Diffuse-reflective	Infrared	Brass	M18 x 95	0.6	3 Wire	PNP NO/NC	Socket	eO03
OC1304	Diffuse-reflective	Infrared	Brass	M18 x 95	0.6	3 Wire	NPN NO/NC	Socket	eO03
OC1305	Diffuse-reflective	Infrared	PBT+GF	M18 x 80	0.6	3 Wire	PNP NO/NC	with Cable	eO04
OC1306	Diffuse-reflective	Infrared	PBT+GF	M18 x 80	0.6	3 Wire	NPN NO/NC	with Cable	eO04
OC1307	Diffuse-reflective	Infrared	PBT+GF	M18 x 95	0.6	3 Wire	PNP NO/NC	Socket	eO03
OC1308	Diffuse-reflective	Infrared	PBT+GF	M18 x 95	0.6	3 Wire	NPN NO/NC	Socket	eO03
OC1309	Diffuse-reflective	Infrared	Brass	M18 x 80	0.6	4 Wire	PNP NO/NC NPN NO/NC	with Cable	eO04
OC1310	Diffuse-reflective	Infrared	Brass	M18 x 95	0.6	4 Wire	PNP NO/NC NPN NO/NC	Socket	eO03
OC1311	Diffuse-reflective	Infrared	PBT+GF	M18 x 80	0.6	4 Wire	PNP NO/NC NPN NO/NC	with Cable	eO04
OC1312	Diffuse-reflective	Infrared	PBT+GF	M18 x 95	0.6	4 Wire	PNP NO/NC NPN NO/NC	Socket	eO03
OC2501	Diffuse-reflective	Red	PBT+GF	40 x 49	0.6	4 Wire	PNP NO/NC NPN NO/NC	Socket	eO05

Notice: Operating voltage 10~36VDC; Output current 200mA.
OC2501 is a programmable photoelectric sensor.

Order No.	UM0001
Prismatic reflector	 Size: 65 x 40 (mm)
Drawing No.	eO06

Order information

Order No.	Display	Thread	Sensing range (bar)	Input voltage (V)	Electric design	Output	Programmable	Drawing No.
PB1101	No	G1/4"	2	8~36 DC	2 Wire	4~20mA	No	eP02
PB1102	No	G1/4"	2	16~36 DC	3 Wire	0~10V	No	eP02
PB1103	No	G1/4"	5	8~36 DC	2 Wire	4~20mA	No	eP02
PB1104	No	G1/4"	5	16~36 DC	3 Wire	0~10V	No	eP02
PB1105	No	G1/4"	10	8~36 DC	2 Wire	4~20mA	No	eP02
PB1106	No	G1/4"	10	16~36 DC	3 Wire	0~10V	No	eP02
PB1107	No	G1/4"	20	8~36 DC	2 Wire	4~20mA	No	eP02
PB1108	No	G1/4"	20	16~36 DC	3 Wire	0~10V	No	eP02
PB1109	No	G1/4"	50	8~36 DC	2 Wire	4~20mA	No	eP02
PB1110	No	G1/4"	50	16~36 DC	3 Wire	0~10V	No	eP02
PB1111	No	G1/4"	100	8~36 DC	2 Wire	4~20mA	No	eP02
PB1112	No	G1/4"	100	16~36 DC	3 Wire	0~10V	No	eP02
PB1113	No	G1/4"	200	8~36 DC	2 Wire	4~20mA	No	eP02
PB1114	No	G1/4"	200	16~36 DC	3 Wire	0~10V	No	eP02
PB1115	No	G1/4"	400	8~36 DC	2 Wire	4~20mA	No	eP02
PB1116	No	G1/4"	400	16~36 DC	3 Wire	0~10V	No	eP02

Order No.	Display	Thread	Sensing range (bar)	Input voltage (V)	Electric design	Output	Programmable	Drawing No.
PC1101	No	G1/4"	2	18~36 DC	5 Wire	PNP NO / NC	Yes	eP02
PC1102	No	G1/4"	5	18~36 DC	5 Wire	PNP NO / NC	Yes	eP02
PC1103	No	G1/4"	10	18~36 DC	5 Wire	PNP NO / NC	Yes	eP02
PC1104	No	G1/4"	20	18~36 DC	5 Wire	PNP NO / NC	Yes	eP02
PC1105	No	G1/4"	50	18~36 DC	5 Wire	PNP NO / NC	Yes	eP02
PC1106	No	G1/4"	100	18~36 DC	5 Wire	PNP NO / NC	Yes	eP02
PC1107	No	G1/4"	200	18~36 DC	5 Wire	PNP NO / NC	Yes	eP02
PC1108	No	G1/4"	400	18~36 DC	5 Wire	PNP NO / NC	Yes	eP02
PC1109	No	G1/4"	2	18~36 DC	5 Wire	NPN NO / NC	Yes	eP02
PC1110	No	G1/4"	5	18~36 DC	5 Wire	NPN NO / NC	Yes	eP02
PC1111	No	G1/4"	10	18~36 DC	5 Wire	NPN NO / NC	Yes	eP02
PC1112	No	G1/4"	20	18~36 DC	5 Wire	NPN NO / NC	Yes	eP02
PC1113	No	G1/4"	50	18~36 DC	5 Wire	NPN NO / NC	Yes	eP02
PC1114	No	G1/4"	100	18~36 DC	5 Wire	NPN NO / NC	Yes	eP02
PC1115	No	G1/4"	200	18~36 DC	5 Wire	NPN NO / NC	Yes	eP02
PC1116	No	G1/4"	400	18~36 DC	5 Wire	NPN NO / NC	Yes	eP02

- Suitable for angle, location, revolution, speed, acceleration, distance measurement
- Bigger load of shaft
- Easy installation
- Small rotational inertia of shaft
- Connector type
- Variety of outputs

IP64 IP65 CE RoHS

Order information

Order No.	Hole size	Pulse per revolution	Output phase	Electronics	Supply voltage	Drawing No.
TEX1	10 mm	2, 5, 10, 20, 30, 40, 50, 60, 80, 100, 120, 125, 150, 160, 180, 200, 250, 300, 360, 400, 500, 512, 600, 720, 800, 900, 1000, 1024, 1200, 1500, *1800, 2000, *2048, 2500, *3000, *3600, *4000, *5000 P/R	2: AB phase 3: ABZ phase 3H: AB+Z high phase	Blank: Voltage C: Open-Collector *L: Line Driver 5VDC *HL: Line Driver 8~26VDC	Blank: 8~26VDC 5V: 5VDC fixed	M801
TEX2	10 mm		2: AB phase 3: ABZ phase 3H: AB+Z high phase	Blank: Voltage C: Open-Collector PP: Push-Pull *L: Line Driver 5VDC *HL: Line Driver 8~26VDC	Blank: 8~26VDC 5V: 5VDC fixed	M802
TEX4	15 mm					M804
TEX7	5 mm					M807
TEX3	10 mm		2: AB phase 3: ABZ phase 3H: AB+Z high phase	Blank: Voltage C: Open-Collector PP: Push-Pull *L: Line Driver 5VDC *HL: Line Driver 5~26VDC	Blank: 8~26VDC 5V: 5VDC fixed	M803
TEX5	8 mm					M805
TEX6	11 mm					M806
TEX8	8 mm					M808
TEX9	10 mm					M809
TEX10	8 / 6 mm					M810

Notice: *Only with AB phase

- Suitable for angle, location, revolution, speed, acceleration, distance measurement
- Smaller load of shaft
- Easy installation in narrow space
- Small rotational inertia of shaft
- Directly connect to rotary axle of motor machine
- Variety of outputs

IP50 CE RoHS

Order information

Order No.	Hole size	Pulse per revolution	Output phase	Electronics	Supply voltage	Drawing No.
VNE1	8 mm	5, 10, 20, 30, 40, 50, 60, 80, 100, 120, 150, 160, 180, 200, 250, 300, 360, 400, 500, 512, 600, 720, 800, 900, 1000, 1024, 1200, 1500, 2000, 2500 P/R	2: AB phase 3H: AB+Z high phase	Blank: Voltage C: Open-Collector *L: Line Driver 5VDC *HL: Line Driver 5~26VDC	Blank: 8~26VDC 5V: 5VDC fixed	M811
VNE2	8 mm	5, 10, 20, 30, 40, 50, 60, 80, 100, 120, 150, 160, 180, 200, 250, 300, 360, 400, 500, 512, 600, 720, 800, 900, 1000, 1024, 1200, 1500, 2000, 2500 P/R	2: AB phase 3: ABZ phase 3H: AB+Z high phase	Blank: Voltage C: Open-Collector PP: Push-Pull *L: Line Driver 5VDC *HL: Line Driver 5~26VDC	Blank: 8~26VDC 5V: 5VDC fixed	M812
VNE7	6 mm					M817
VNE3	6 mm	10, 20, 30, 40, 50, 60, 80, 100, 160, 180, 200, 250, 300, 360, 400, 500, 512, 600, 720, 800, 900, 1000, 1024 P/R	2: AB phase 3: ABZ phase 3H: AB+Z high phase	Blank: Voltage C: Open-Collector *L: Line Driver 5VDC *HL: Line Driver 8~26VDC	Blank: 8~26VDC 5V: 5VDC fixed	M813
VNE4	6 mm	40, 50, 60, 100, 150, 200, 250, 300, 360, 400, 500, 1000 P/R	2: AB phase	LV: Voltage HV: Voltage C: Open-Colletor	Blank: 5~12VDC 10~26VDC 5~26VDC	M814
VNE5	4 mm	40, 50, 60, 100, 150, 200, 250, 300, 360, 400, 500 P/R	2: AB phase	LV: Voltage HV: Voltage C: Open-Colletor	Blank: 5~12VDC 10~26VDC 5~26VDC	M815
VNE6	6 mm	5, 10, 20, 30, 40, 50, 60, 80, 100, 120, 150, 160, 180, 200, 250, 300, 360, 400, 500, 512, 600, 720, 800, 900, 1000, 1024, 1200, 1500, 2000, 2500 P/R	2: AB phase 3: ABZ phase 3H: AB+Z high phase	Blank: Voltage C: Open-Collector PP: Push-Pull *L: Line Driver 5VDC *HL: Line Driver 8~26VDC	Blank: 8~26VDC 5V: 5VDC fixed	M816
VNE8	6 mm					M818
VNE9	6 mm					M819

Notice: *Only with AB phase

- Simple structure
- Angle run length coding (axis of rotation)
- Linear coding (laser remote measuring)
- Power down doesn't influence the collection of coded data.
- Max. 24-bit encoding.

IP50 IP64 CE RoHS

Order information

Order No.	Hole size	Pulse per revolution	Output code	Electronics	Supply voltage	Drawing No.
TX1	6 mm	8, 16, 32 P/R	G: Gray	LV: Voltage HV: Voltage C: Open-Colletor	Blank: 5~12VDC 10~26VDC 5~26VDC	M820
TX2	6 mm	8, 16, 32, 64, 128, 256 P/R	G: Gray	Blank: NPN Voltage C: Open-Colletor	Blank: 10~26VDC 5V: 5 VDC fixed	M821
TX3	8 mm	8, 16, 32, 64, 128, 256, 512, 1024 P/R	G: Gray	Blank: 10~26VDC 5V: 5 VDC fixed	Blank: Axial Cable *PR10: Radial 10 pin *PR12: Radial 12 pin	M822

Notice: *Only with AB phase

- Resistant to external shock through a outline with casting structure
- Framework is set directly and owns concise structure
- Small rotational inertia of shaft
- Variety of outputs

IP50 CE RoHS

Order information

Order No.	Hole size	Pulse per revolution	Output phase	Electronics	Supply voltage	Drawing No.
VAN	30 mm	200, 512, 600, 1024 P/R	2: AB phase 3: ABZ phase 3H: AB+Z high phase	Blank: Voltage C: Open-Collector PP: Push-Pull *L: Line Driver 5VDC *HL: Line Driver 5~26VDC	Blank: 8~26VDC 5V: 5VDC fixed	M825
VAN1	5 / 6 6.35 / 8 / 9.525 / 10 mm	2, 5, 10, 20, 30, 40, 50, 60, 80, 100, 120, 125, 150, 160, 180, 200, 250, 300, 360, 400, 500, 512, 600, 720, 800, 900, 1000, 1024, 1200, 1500, 2000, 2500 P/R	2: AB phase 3: ABZ phase 3H: AB+Z high phase	Blank: Voltage C: Open-Collector PP: Push-Pull *L: Line Driver 5VDC *HL: Line Driver 8~26VDC	Blank: 8~26VDC 5V: 5VDC fixed	M823
VAN2	12 12.7 15 mm	60, 200, 360, 400, 500, 600, 900, 1000, 1024, 2000, 2500 P/R	2: AB phase 3: ABZ phase 3H: AB+Z high phase	Blank: Voltage C: Open-Collector PP: Push-Pull *L: Line Driver 5VDC *HL: Line Driver 8~26VDC	Blank: 8~26VDC 5V: 5VDC fixed	M824
VAN3	60 mm	2592 P/R	2: AB phase 3: ABZ phase 3H: AB+Z high phase	Blank: Voltage C: Open-Collector PP: Push-Pull *L: Line Driver 5VDC *HL: Line Driver 8~26VDC	Blank: 8~26VDC 5V: 5VDC fixed	M826
VAN4	12 / 12.7 / 15 mm	60, 200, 360, 400, 500, 600, 900, 1000, 1024, 2000, 2500 P/R	2: AB phase 3: ABZ phase 3H: AB+Z high phase	Blank: Voltage C: Open-Collector PP: Push-Pull *L: Line Driver 5VDC *HL: Line Driver 5~26VDC	Blank: 8~26VDC 5V: 5VDC fixed	M827
VAN5	40 mm	512, 600, 1024 P/R	2: AB phase 3: ABZ phase 3H: AB+Z high phase	Blank: Voltage C: Open-Collector PP: Push-Pull *L: Line Driver 5VDC *HL: Line Driver 5~26VDC	Blank: 8~26VDC 5V: 5VDC fixed	M828
VAN6	12 / 15 mm	60, 200, 360, 400, 500, 600, 900, 1000, 1024, 2000, 2500 P/R	2: AB phase 3: ABZ phase 3H: AB+Z high phase	Blank: Voltage C: Open-Collector PP: Push-Pull *L: Line Driver 5VDC *HL: Line Driver 8~26VDC	Blank: 8~26VDC 5V: 5VDC fixed	M829
VAN7	8 mm	5, 10, 20, 30, 40, 50, 60, 80, 100, 120, 150, 160, 180, 200, 250, 300, 360, 400, 500, 512, 600, 720, 800, 900, 1000, 1024, 1200, 1500, 2000, 2500 P/R	2: AB phase 3H: AB+Z high phase	Blank: Voltage C: Open-Collector *L: Line Driver 5VDC *HL: Line Driver 8~26VDC	Blank: 8~26VDC 5V: 5VDC fixed	M830

Notice: *Only with AB phase

Order No.	HC-42	HC-42-K	SCT/SCTS	SCT-C/SCTS-C	SMT/SMT-S	SMT-C
Type						

Order No.	SRJ/SRJ-S	SRJ-C	SOT	SOT-C	SGL-C	G2J
Type						

Order information

Type	D	Installation / material type	d1	d2
HC-42	42		8, 10, 12	8, 10, 12
HC-42	42		11K, 15K	11K, 15K
SCT	8, 12, 16, 20, 25, 32, 40, 50, 63		4, 6, 8, 10, 12, 16, 20, 25, 35	4, 6, 8, 10, 12, 16, 20, 25, 35
SCTS	12, 16, 20, 25, 32, 40, 50, 63		6, 8, 10, 12, 16, 20, 25, 35	6, 8, 10, 12, 16, 20, 25, 35
SCT	12, 16, 20, 25, 32, 40, 50, 63	C	5, 6, 8,12, 16, 18, 22, 30	5, 6, 8,12, 16, 18, 22, 30
SCTS	12, 16, 20, 25, 32, 40, 50, 63	C	5, 6, 8,12, 16, 18, 22, 30	5, 6, 8,12, 16, 18, 22, 30
SMT	16, 19, 20, 25		8, 10, 10, 12	8, 10, 10, 12
SMT	16, 19, 25	S	8, 10, 12	8, 10, 12
SMT	16, 19, 20, 25	C	8, 8, 10, 12	8, 8, 10, 12
SRJ	20, 30, 40, 55		9.525, 14, 20, 25	9.525, 14, 20, 25
SRJ	40	S	20	20
SRJ	20, 30, 40, 55	C	8, 15, 18, 25	8, 15, 18, 25
SOT	20, 25, 32, 40, 50, 63		8, 10, 14, 16, 20, 25	8, 10, 14, 16, 20, 25
SOT	20, 25, 32, 40, 50, 63	C	8, 10, 12, 16, 20, 25	8, 10, 12, 16, 20, 25
SGL	27, 34, 40, 50, 65	C		
G2J	13.5, 16, 20		4, 6, 8	4, 6, 8

Notice: HC-42-d1K-d2K, Recommended to use with META's encoder TEX4.

Order No.: SCTS-20C- Ø5 x Ø5

Type | D | Installation / material | d1 | d2

D: Dimension

Installation / material:

Original accessory: Set screw type

C: Clamping type

Original accessory: Aluminum alloy or POM(G2J)

S: Stainless steel

d1: Max. inside diameter

d2: Max. inside diameter

- Smart Speed Monitor. User can easily set the frequency, rotation rate, pulse, and the warning signal
- Display: LCD
- Mounting: DIN35
- Output: PNP, NPN, Relay, 0/4~20mA, 0~10V
- Power protection: overload, short-circuit, reverse polarity

IP50 CE RoHS

Order information

Order No.	Rotation Setting (RPM)	Frequency Setting (Hz)	Rated voltage [V]	Input	Output function	Analog output	Relay output	Transistor output	Drawing NO.
SM1001	1~60000	0.1~1000	230 AC / 24 DC	2	PNP / NPN / Namur	2	2	2	eS01

Connection

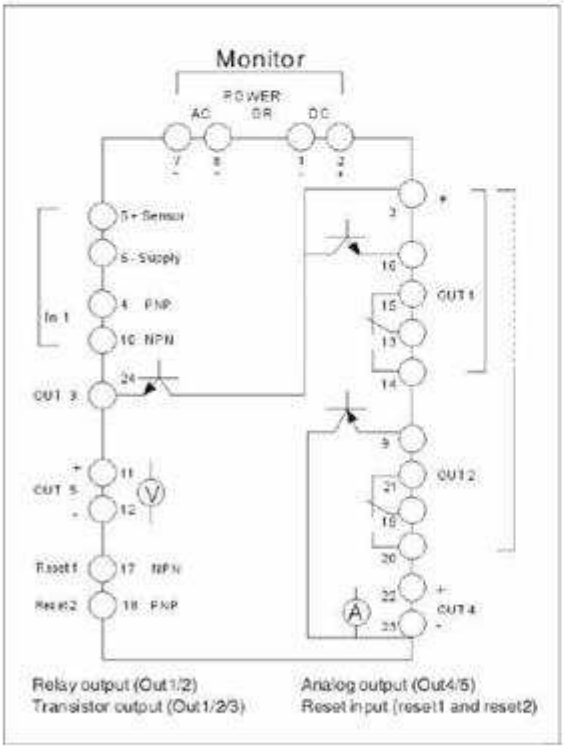

Wiring

	Function		Function
1	DC Supply voltage (L-)	13	Relay-1 (center contact)
2	DC Supply voltage (L+)	14	Relay-1(NO contact)
3	Supply transistor outputs (L+)	15	Relay-1 (NC contact)
4	Sensor signal PNP	16	Transistor output-1 PNP
5	DC Sensor supply (L+)	17	Reset-1 NPN
6	DC Sensor supply (L-)	18	Reset-2 PNP
7	AC Supply voltage	19	Relay-2 (center contact)
8	AC Supply voltage	20	Relay-2 (NO contact)
9	Transistor output NPN	21	Relay-2 (NC contact)
10	Sensor signal NPN	22	Analog current output (+)
11	Analog voltage output (L+)	23	Analog current output (-)
12	Analog voltage output (L-)	24	Transistor output-2 PNP

- To reduce the number of industrial assembly lines and quicken the detection time. Signal processed with special encoding can be transmitted through power line
- Scatter, arborescence, annularity industrial assembly line
- Industrial interface: RS232, RS485, Profibus, deviceNet, modBus, ethernet
- Display: LED
- Power protection: overload, short-circuit, reverse polarity

IP67 CE RoHS

Order information

Order No.	Digital input	Input voltage	loading output	Output voltage [V]	Input output connection	AS-i location	AS-i connection	Drawing No.
AS4104	4 x DC PNP	Through AS-i	--	--	M12 Socket	Single address	Flat cable	eA01
AS4122	2 x DC PNP	Through AS-i	2 x DC PNP	External 24VDC(AUX)	M12 Socket	Single address	Flat cable	eA01
AS4140	--	Through AS-i	4 x DC PNP	External 24VDC(AUX)	M12 Socket	Single address	Flat cable	eA01
AS4144	4 x DC PNP	Through AS-i	4 x DC PNP	External 24VDC(AUX)	M12 Socket	Single address	Flat cable	eA02
AS4001	4 x DC PNP	Through AS-i	--	External 24VDC(AUX)	M12 Socket	A/B	Flat cable	eA01
AS4002	2 x DC PNP	Through AS-i	2 x DC PNP	External 24VDC(AUX)	M12 Socket	A/B	Flat cable	eA01
AS4003	--	Through AS-i	3 x DC PNP	External 24VDC(AUX)	M12 Socket	A/B	Flat cable	eA01
AS4004	4 x DC PNP	Through AS-i	3 x DC PNP	External 24VDC(AUX)	M12 Socket	A/B	Flat cable	eA02

Order No.	AS9001	AS9002
Flat cable		

Notice: The base of length is 1M.

- Long lifetime and brightness LED lamp embedded
- Modular design for installation without tools
- Patent design for advancing brightness and easy installation
- Good looking and well practical stand
- The frequency of alarm: 60~80 times per minute
- Buzzer volume: 100 dB per meter
- Materials in protection of corrosive
- Protection rating:IP54、IP65

IP65 CE RoHS

Light Tower

05	50	RYG	24	S10	W	L	H
Series	Size	Layer color	Power supply	Type of Stand	Layer color	Type of light	Protection
05	∅50 mm	R-Red	12-12VDC	S01、S10、S25	W-White	L-Continuous	H-IP65
		Y-Yellow	24-24VDC	T01、T10、T25	K-Black	F-Flashing	
		G-Green	AW-85~275VAC	L01、L10、L25			
		B-Blue		R01、R10、R25			
		W-White		P			
		Z-Buzzer					

Type of Stand

Shape	S Type	T Type	L Type	R Type	P Type
Drawing No.	M503	M504	M505	M506	M507
Drawing					

- Long lifetime and brightness LED lamp embedded
- Modular design for installation without tools
- Patent design for advancing brightness and easy installation
- Good looking and well practical stand
- The frequency of alarm: 60~80 times per minute
- Buzzer volume: 100 dB per meter
- Materials in protection of corrosive
- Protection rating:IP54、IP65

IP65 CE RoHS

Light Tower

05	70	RYG	24	S10	W	L	H
Series	Size	Layer color	Power supply	Type of Stand	Layer color	Type of light	Protection
05	⌀70 mm	R-Red	12-12VDC	S01、S10、S25	W-White	L-Continuous	H-IP65
		Y-Yellow	24-24VDC	T01、T10、T25	K-Black	F-Flashing	
		G-Green	AW-85~275VAC	L01、L10、L25			
		B-Blue		R01、R10、R25			
		W-White		P			
		Z-Buzzer					

Type of Stand

Bracket shape	S Type	T Type	L Type	R Type	P Type
Drawing No.	M508	M509	M510	M511	M512
Drawing					

- Mounting hole diameter 16mm
  Apparent shapes with rectangular 18X24mm, square 18X18mm and round diameter 18mm
- Illuminated by midget grooved T1 3/4 lamps including incandescent, discharged and LED lamps
- The lifetime of LED with high brightness up to 5000 hours

RoHS

Coding Principle

01	P	—	R	I	40	.	Q	+	R	+	L	24
I	II		III	IV	V		VI		VII		VIII	IX

I: Series code	01 Series with 16mm diameter mounting hole
II: Main category	P=Indicators
III: Front shape	C=Round S=Square R=Rectangular
IV: Function code	I=Indicators
V: Protection rating	40=Standard 65=Rubber-sealed
VI: Teminal type	S=Soldering Q=Plug-in
VII: Cap color	W=White, R=Red, Y=Yellow, G=Light Green, B=Blue, O=Orange, V=Deep Green, K=Black
VIII: Light source	L=LED lamp D=Incandescent lamp A=Discharged lamp Omission=Without lamp
IX: Operating voltage	06=6VDC 12=12VDC 24=24VDC 11=110VAC 22=220VAC

Note 1: Available colors of LED are red, yellow, green, blue
The standard matches between cap and LED are as followed:
W→Yellow LED R→Red LED Y→Yellow LED G→Green LED B→Blue LED O→Yellow LED
V→Green LED

Note 2: Available colors of discharged lamps are red and green.
The standard matches between cap and lamp are as followed:
W、R、Y、O→Red lamp G、B、V→Green lamp

- Mounting hole diameter 16mm
  Apparent shapes with rectangular 18X24mm, square 18X18mm and round diameter 18mm
- High bezel that prevents accidental touching
- Illuminated by midget grooved T1 3/4 lamps including incandescent, discharged and LED lamps
- Snap-action which accelerates on-off switching
- Normally closed and normally open contacts in each switch block
- Actuating travel: 3mm
- Machanical lifetime: Momentary $2X10^6$ operations; Alternative $1X10^5$ operations

RoHS

Coding Principle

01 P — R A 40 . Q 1P + R + L 24

I II III IV V VI VII VIII IX X

I: Series code	01 Series with 16mm diameter mounting hole
II: Main category	P=Pushbutton Switches
III: Front shape	C=Round S=Square R=Rectangular
IV: Function code	M=Momentary A=Alternative
V: Protection rating	40=Standard 65=Rubber-sealed
VI: Teminal type	S=Soldering Q=Plug-in
VII: Contact mode	1P=1A1B 2P=2A2B
VII: Cap color	W=White, R=Red, Y=Yellow, G=Light Green, B=Blue, O=Orange, V=Deep Green, K=Black
VIII: Light source	L=LED lamp D=Incandescent lamp A=Discharged lamp Omission=Without lamp
IX: Operating voltage	06=6VDC 12=12VDC 24=24VDC 11=110VAC 22=220VAC

Note 1: Available colors of LED are red, yellow, green, blue
The standard matches between cap and LED are as followed:
W→Yellow LED R→Red LED Y→Yellow LED G→Green LED B→Blue LED O→Yellow LED
V→Green LED

Note 2: Available colors of discharged lamps are red and green.
The standard matches between cap and lamp are as followed:
W、R、Y、O→Red lamp G、B、V→Green lamp

- Mounting hole diameter 16mm
  Apparent shapes with rectangular 18X24mm, square 18X18mm and round diameter 18mm
- Snap-action which accelerates on-off switching
- Normally closed and normally open contacts in each switch block
- Actuating travel: 2 positions L 90° and V 90°
- Machanical lifetime: 50000 operations

RoHS

Coding Principle

01	K	—	R	A	40	.	Q	1P	*	L2
I	II		III	IV	V		VI	VII		VIII

I: Series code	01 Series with 16mm diameter mounting hole		
II: Main category	K=Keylock Switches		
III: Front shape	C=Round	S=Square	R=Rectangular
IV: Function code	M=2 Way Momentary	A=2 Way Alternative	
V: Protection rating	40=Standard	65=Rubber-sealed	
VI: Teminal type	S=Soldering	Q=Plug-in	
VII: Contact mode	1P=1A1B	2P=2A2B	
VIII: Inlet type	L1=L type 90° one inlet V1=V type 90° one inlet	L2=L type 90° two inlets V2=V type 90° two inlets	

- Mounting hole diameter 16mm
  Apparent shapes with rectangular 18X24mm, square 18X18mm and round diameter 18mm
- Snap-action which accelerates on-off switching
- Normally closed and normally open contacts in each switch block
- Actuating travel: 2 positions L 90° and V 90°
- Machanical lifetime: 50000 operations

RoHS

Coding Principle

01	S	—	R	A	40	.	Q	1P	*	L
I	II		III	IV	V		VI	VII		VIII

I: Series code	01 Series with 16mm diameter mounting hole		
II: Main category	S=Selector Switches		
III: Front shape	C=Round	S=Square	R=Rectangular
IV: Function code	M=2 way Momentary	A=2 way Alternative	
V: Protection rating	40=Standard	65=Rubber-sealed	
VI: Teminal type	S=Soldering	Q=Plug-in	
VII: Contact mode	1P=1A1B	2P=2A2B	
VIII: Knob type	L=L type 90°	V=V type 90°	

- Mounting hole diameter 16mm, Front size is round diameter 26mm
- Cladding cover design to meet the requirement of European system
- There are only red LED and red discharged lamp available in illuminated emergency switch
- Snap-action which accelerates on-off switching
- Normally closed and normally open contacts in each switch block
- Machanical lifetime: 50000 operations

RoHS

Coding Principle

01	S	—	C	E	40	.	Q	1P	*	R	+	L	12
I	II		III	IV	V		VI	VII		VIII		IX	X

I: Series code	01 Series with 16mm diameter mounting hole			
II: Main category	S=Emergency Stop Switches			
III: Front shape	C=Round			
IV: Function code	E=Rotate to reset			
V: Protection rating	40=Standard	65=Rubber-sealed		
VI: Teminal type	S=Soldering	Q=Plug-in		
VII: Contact mode	1P=1A1B	2P=2A2B		
VIII: Light color	R=Red			
VIII: Light source	L=LED lamp	A=Discharged lamp	Omission=Without lamp	
IX: Operating voltage	06=6VDC 12=12VDC 24=24VDC 11=110VAC 22=220VAC			

- Mounting hole diameter 16mm
  Apparent shapes with rectangular 18X24mm square 18X18mm and round diameter 18mm
- 70dB at a distance 30cm

RoHS

Coding Principle

01	B	—	R	I	40	.	Q	*	24	FR
I	II		III	IV	V		VI		VII	VIII

I: Series code	01 Series with 16mm diameter mounting hole		
II: Main category	B=Buzzers		
III: Front shape	C=Round	S=Square	R=Rectangular
IV: Function code	C=Continous	I=Intermittent	
V: Protection rating	40=Standard		
VI: Teminal type	S=Soldering	Q=Plug-in	
IX: Operating voltage	06=6VDC 12=12VDC 24=24VDC 11=110VAC 22=220VAC		
VIII: Light source	R=Red LED FR=Flash LED Omission=Without lamp		

Note: Only rectangular shape can be assembled lamps

Order No.	Anti-twisting Ring	Drawing No.
01Z-100		M145

Order No.	Rectangular Protective Cover	Drawing No.
01Z-200.R		M146

Order No.	Square Protective Cover	Drawing No.
01Z-200.S		M147

Order No.	PCB Plug-in Base	Drawing No.
01Z-300		M148

Order No.	Blind Plug	Drawing No.
01Z-400		M149

Order No.	Connector	Drawing No.
01Z-500		-

Order No.	Insulation Cover	Drawing No.
01Z-600		-

Order No.	Mounting Tool	Drawing No.
01Z-T01		-

Order No.	Lenses Remover	Drawing No.
01Z-T02		-

Order No.	Lamp Remover	Drawing No.
01Z-T03		-

Order No.	Metallic Screw Nut	Drawing No.
01Z-NU.M		-

Order No.	Rectangular Dust Wrapper	Drawing No.
01Z-700.R		M150

Order No.	Square Dust Wrapper	Drawing No.
01Z-700.S		M151

Order No.	Rectangular Flush-mounting Cover	Drawing No.
01Z-800.R		M152

Order No.	Square Flush-mountingCover	Drawing No.
01Z-800.S		M153

- Elegant and sophisticated design, add the extra value and esthetic feeling into applications
- Professional selection of engineering materials, overcome the harshest of your environment
- Friendly handling and module design, save your treasure time while installation
- Flexible and module assembly, effectively decrease the cost of stock
- Whole series slim; delicate and light, up to the requirement of protection IP40 and IP65
- Lower and flush mounting actuators, highly increase the fine appearance of your panel
- 22、25 and 30mm mounting holes, fulfill your intentions of choice and replacement

Coding Principle

Indicators E2I/E3I	E	2	I	0	W	3	L	Y

Part No.	Code Description	
E	Classification	: E=IP40 Standard H=IP65 Rubber-sealed
2	Mounting size	: 2=22mm、25mm Standard mounting 3= 30mm Flush mounting
I0	Cap style	: I0=Full lens, I1=Flat lens, I2=Raised lens
W	Cap color	: R=Red, Y=Yellow, G=Green, B=Blue, W=White
3	Operating voltage: 1=6VDC, 2=12VDC, 3=24VDC, 4=110VAC, 5=220VAC	
L	Light source	: D=Incandescent lamp, A=Discharged lamp, L=LED lamp, Omission=Without lamp
Y	Extra code	: If the color of lamps and lens are different, please add this code to tell the color of lamp.
Remarks	E3I0 full lens style is not available.	

- Elegant and sophisticated design, add the extra value and esthetic feeling into applications
- Professional selection of engineering materials, overcome the harshest of your environment
- Friendly handling and module design, save your treasure time while installation
- Flexible and module assembly, effectively decrease the cost of stock
- Whole series slim; delicate and light, up to the requirement of protection IP40 and IP65
- Lower and flush mounting actuators, highly increase the fine appearance of your panel
- 22、25 and 30mm mounting holes, fulfill your intentions of choice and replacement

Coding Principle

Pushbutton Switches E2P/E3P	E	2	P	1	W	1	A	3	L	Y	.	A

Part No.	Code Description	
E	Classification	: E=IP40 Standard H=IP65 Rubber-sealed
2	Mounting size	: 2=22mm、25mm Standard mounting 3= 30mm Flush mounting
P1	Cap style	: Non-illumination P1=Flat head, P2=Raised head, P3=Sunken head P4=Mushroom head, P5=High bezel head Illumination P1=Flat button, P2=Raised button, P3=Sunken button P4=Mushroom button, P5=High bezel button
W	Cap color	: R=Red, Y=Yellow, G=Green, B=Blue, W=wWhite, K=Black
1A	Contact mode	: 1A=1NO 1B=1NC 2A=2NO 2B=2NC AB=1NO+1NC
3	Operating voltage: 1=6VDC, 2=12VDC, 3=24VDC, 4=110VAC, 5=220VAC	
L	Light source	: D=Incandescent lamp, A=Discharged lamp, L=LED lamp, Omission=Without lamp
Y	Extra code	: If the colors of lamp and lens are different, please add this code to tell the color of lamp.
.A	Function mode	: A=Maintained, Omission=Momentary

- Elegant and sophisticated design, add the extra value and esthetic feeling into applications
- Professional selection of engineering materials, overcome the harshest of your environment
- Friendly handling and module design, save your treasure time while installation
- Flexible and module assembly, effectively decrease the cost of stock
- Whole series slim; delicate and light, up to the requirement of protection IP40 and IP65
- Lower and flush mounting actuators, highly increase the fine appearance of your panel
- 22、25 and 30mm mounting holes, fulfill your intentions of choice and replacement

Coding Principle

Pushbutton Switches E2P/E3P	E	2	S	1	K	1	A	3	L	Y	.	V

Part No.	Code Description	
E	Classification	: E=IP40 Standard H=IP65 Rubber-sealed
2	Mounting size	: 2=22mm、25mm Standard mounting 3= 30mm Flush mounting
S1	Handling type	: S1=2 Positions, momentary 45° ; S2=2 Positions, maintained 90° S3=3 Positions, left maintained 45° right maintained 45° S4=3 Positions, left momentary 45° right momentary 45° S5=3 Positions, left maintained 45° right momentary 45°
K	Handle type	: K=Short handle (knob), L=Long handle (lever)
1A	Contact mode	: 1A=1NO, 1B=1NC, 2A=2NO, 2B=2NC AB=Left 1NO+Right 1NC, BA=Left 1NC+Right 1NO
3	Operating voltage:	1=6VDC,2=12VDC,3=24VDC,4=110VAC,5=220VAC
L	Light source	: D=Incandescent lamp, A=Discharged lamp, L=LED lamp,Omission=Without lamp
Y	Lamp color	: While LED lamp installed, please add this code to identify the color of LED R=Red, Y=Yellow, G=Green, B=Blue, W=White
.V	Handle shape	: V=V shape, Omission= L shape(only for S2 handing type)

- Elegant and sophisticated design, add the extra value and esthetic feeling into applications
- Professional selection of engineering materials, overcome the harshest of your environment
- Friendly handling and module design, save your treasure time while installation
- Flexible and module assembly, effectively decrease the cost of stock
- Whole series slim; delicate and light, up to the requirement of protection IP40 and IP65
- Lower and flush mounting actuators, highly increase the fine appearance of your panel
- 22、25 and 30mm mounting holes, fulfill your intentions of choice and replacement

Coding Principle

Keylock Switches E2K/E3K	E	2	K	1	W	1	A	.	V

Part No.	Code Description	
E	Classification	: E=IP40 Standard H=IP65 Rubber-sealed
2	Mounting size	: 2=22mm、25mm Standard mounting 3= 30mm Flush mounting
K1	Handling type	: K1=2 Positions, momentary 45° ; K2=2 Positions, maintained 90° K7=3 Positions, left momentary 45° right maintained 90° K8=3 Positions, left maintained 90° right maintained 90°
W	Key pull	: I=One inlet, V=Two inlets, W=Three inlets
1A	Contact mode	: 1A=1NO, 1B=1NC, 2A=2NO, 2B=2NC AB=Left 1NO+Right 1NC, BA=Left 1NC+Right 1NO
.V	Handle shape	: V= V shape, omission= L shape(only for S2 handing type)

- Elegant and sophisticated design, add the extra value and esthetic feeling into applications
- Professional selection of engineering materials, overcome the harshest of your environment
- Friendly handling and module design, save your treasure time while installation
- Flexible and module assembly, effectively decrease the cost of stock
- Whole series slim; delicate and light, up to the requirement of protection IP40 and IP65
- Lower and flush mounting actuators, highly increase the fine appearance of your panel
- 22、25 and 30mm mounting holes, fulfill your intentions of choice and replacement

Coding Principle

Pushbutton Switches E2P/E3P	E	2	R	1	R	1	B

Part No.	Code Description	
E	Classification	: E=IP40 Standard H=IP65 Rubber-sealed
2	Mounting size	: 2=22mm、25mm Standard mounting 3= 30mm Standard mounting
R1	Reset mode	: R1=Rotate to reset
R	Cap color	: R=Red
1B	Contact mode	: 1A=1NO, 1B=1NC, 2A=2NO, 2B=2NC, AB=1NO+1NC

- Elegant and sophisticated design, add the extra value and esthetic feeling into applications
- Professional selection of engineering materials, overcome the harshest of your environment
- Friendly handling and module design, save your treasure time while installation
- Flexible and module assembly, effectively decrease the cost of stock
- Whole series slim; delicate and light, up to the requirement of protection IP40 and IP65
- Lower and flush mounting actuators, highly increase the fine appearance of your panel
- 22、25 and 30mm mounting holes, fulfill your intentions of choice and replacement

Coding Principle

Buzzers E2B	E	2	B	1	.	0	6

Part No.	Code Description
E	Classification : E=IP40 Standard H=IP65 Rubber-sealed
2	Mounting size : 2=22mm、25mm Standard mounting 3= 30mm Flush mounting
B1	Tone mode : B1=Continuous, B2=Intermittent
.06	Operating voltage: 06=6VDC, 12=12VDC, 24=24VDC

Order No.	Contact Block	Description	Drawing No.
2SWA		A= 1 normally open, green .3 .4	M236
2SWB		B= 1 normally close, red .1 .2	M236

Order No.	Lamp Holder	Description	Drawing No.
2LH		X1(+)-X2(-) Make the right connection, while polarized LED lamps installed.	M237

Order No.	BA9s Lamp	Description	Drawing No.
L.BA9s-L06. R(Y/G/B/W)		LED Lamp Red(Yellow/ Green/Blue/White), 6VDC	M238
L.BA9s-L12. R(Y/G/B/W)		LED Lamp Red(Yellow/ Green/Blue/White), 12VDC	M238
L.BA9s-L24. R(Y/G/B/W)		LED Lamp Red(Yellow/ Green/Blue/White), 24VDC	M238
L.BA9s-L11. R(Y/G/B/W)		LED Lamp Red(Yellow/ Green/Blue/White), 110 VAC	M238
L.BA9s-L22. R(Y/G/B/W)		LED Lamp Red(Yellow/ Green/Blue/White), 220 VAC	M238
L.BA9s-D06(12/24)		Incandescent lamp, 6VDC (12/24)	M239

Order No.	Anti-twisting Ring	Description	Drawing No.
02Z-100		Only for standard mounting to increase anti-twisting torque while working.	M240

Order No.	Protective Cap	Description	Drawing No.
02Z-200.F		F=Suitable to flat head/button pushbutton	M241
02Z-200.P		P=Suitable to raised head/button pushbutton	M242
02Z-200.M		M=Suitable to flush flat head/button pushbutton	M243

Order No.	Metallic Front Ring	Description	Drawing No.
02Z-300.L		L=Low ring (suitable to standard mounting spec.)	M244
02Z-300.H		H=High ring (suitable to standard mounting spec.)	M245
02Z-300.F		F=Flat ring (suitable to flush mounting spec.)	M246

Order No.	Blind Plug	Description	Drawing No.
02Z-400.22		22= Suitable to 22mm mounting hole	M247
02Z-400.25		25=Suitable to 25mm mounting hole	M247
02Z-400.30		30=Suitable to 30mm mounting hole	M247

Order No.	Emergency Protective Cover	Description	Drawing No.
02Z-500.R		For standard mounting/flush mounting emergency stop switches	M248

Order No.	Nut Fixer	Description	Drawing No.
02Z-T01		Fixing torque ranges from 2 to 3 Nm, maximum torque not exceeding 3 Nm.	M249

- Through status indicators (red, yellow, and green LEDs), the users can detect on-site equipments directly, precisely, and fast so as to handle them immediately
- No need to use any kind of cable for connection by adopting wireless network between the transmitter (TX) and the receiver (RX). It is easy, convenient, and reliable
- Output PNP NO/NC or NPN NO/NC simultaneously and be able to connect relay directly in order to satisfy different needs

IP65 CE RoHS

Order Information

Order No.	Sensing range (M)	Minimum sensing object (mm)	Beams	Bar length-A (mm)	Housing length-B (mm)	Output	Drawing No.
90-20.160.1	0.5~5	20	8	160	180	PNP	M901
90-20.280.1	0.5~5	20	16	280	300	PNP	M904
90-20.400.1	0.5~5	20	24	400	420	PNP	M906
90-20.520.1	0.5~5	20	32	520	540	PNP	M908
90-20.640.1	0.5~5	20	40	640	660	PNP	M909
90-20.760.1	0.5~5	20	48	760	780	PNP	M911
90-20.880.1	0.5~5	20	56	880	900	PNP	M913
90-20.1000.1	0.5~5	20	64	1000	1020	PNP	M914
90-20.160.2	0.5~5	20	8	160	180	NPN	M901
90-20.280.2	0.5~5	20	16	280	300	NPN	M904
90-20.400.2	0.5~5	20	24	400	420	NPN	M906
90-20.520.2	0.5~5	20	32	520	540	NPN	M908
90-20.640.2	0.5~5	20	40	640	660	NPN	M909
90-20.760.2	0.5~5	20	48	760	780	NPN	M911
90-20.880.2	0.5~5	20	56	880	900	NPN	M913
90-20.1000.2	0.5~5	20	64	1000	1020	NPN	M914
90-25.200.1	0.5~5	25	8	200	220	PNP	M902
90-25.360.1	0.5~5	25	16	360	380	PNP	M905
90-25.520.1	0.5~5	25	24	520	540	PNP	M908
90-25.680.1	0.5~5	25	32	680	700	PNP	M910
90-25.840.1	0.5~5	25	40	840	860	PNP	M912
90-25.1000.1	0.5~5	25	48	1000	1020	PNP	M914
90-25.1160.1	0.5~5	25	56	1160	1180	PNP	M916

Order No.	Sensing range (M)	Minimum sensing object (mm)	Beams	Bar length-A (mm)	Housing length-B (mm)	Output	Drawing No.
90-25.1320.1	0.5~5	25	64	1320	1340	PNP	M918
90-25.200.2	0.5~5	25	8	200	220	NPN	M902
90-25.360.2	0.5~5	25	16	360	380	NPN	M905
90-25.520.2	0.5~5	25	24	520	540	NPN	M908
90-25.680.2	0.5~5	25	32	680	700	NPN	M910
90-25.840.2	0.5~5	25	40	840	860	NPN	M912
90-25.1000.2	0.5~5	25	48	1000	1020	NPN	M914
90-25.1160.2	0.5~5	25	56	1160	1180	NPN	M916
90-25.1320.2	0.5~5	25	64	1320	1340	NPN	M918
90-30.240.1	0.5~5	30	8	240	260	PNP	M903
90-30.440.1	0.5~5	30	16	440	460	PNP	M907
90-30.640.1	0.5~5	30	24	640	660	PNP	M909
90-30.840.1	0.5~5	30	32	840	860	PNP	M912
90-30.1040.1	0.5~5	30	40	1040	1060	PNP	M915
90-30.1240.1	0.5~5	30	48	1240	1260	PNP	M917
90-30.1440.1	0.5~5	30	56	1440	1460	PNP	M919
90-30.1640.1	0.5~5	30	64	1640	1660	PNP	M921
90-30.240.2	0.5~5	30	8	240	260	NPN	M903
90-30.440.2	0.5~5	30	16	440	460	NPN	M907
90-30.640.2	0.5~5	30	24	640	660	NPN	M909
90-30.840.2	0.5~5	30	32	840	860	NPN	M912
90-30.1040.2	0.5~5	30	40	1040	1060	NPN	M915
90-30.1240.2	0.5~5	30	48	1240	1260	NPN	M917
90-30.1440.2	0.5~5	30	56	1440	1460	NPN	M919
90-30.1640.2	0.5~5	30	64	1640	1660	NPN	M921
90-35.280.1	0.5~5	35	8	280	300	PNP	M904
90-35.520.1	0.5~5	35	16	520	540	PNP	M908
90-35.760.1	0.5~5	35	24	760	780	PNP	M911
90-35.1000.1	0.5~5	35	32	1000	1020	PNP	M914
90-35.1240.1	0.5~5	35	40	1240	1260	PNP	M917
90-35.1480.1	0.5~5	35	48	1480	1500	PNP	M920

Order No.	Sensing range (M)	Minimum sensing object (mm)	Beams	Bar length-A (mm)	Housing length-B (mm)	Output	Drawing No.
90-35.1720.1	0.5~5	35	56	1720	1740	PNP	M922
90-35.1960.1	0.5~5	35	64	1960	1980	PNP	M923
90-35.280.2	0.5~5	35	8	280	300	NPN	M904
90-35.520.2	0.5~5	35	16	520	540	NPN	M908
90-35.760.2	0.5~5	35	24	760	780	NPN	M911
90-35.1000.2	0.5~5	35	32	1000	1020	NPN	M914
90-35.1240.2	0.5~5	35	40	1240	1260	NPN	M917
90-35.1480.2	0.5~5	35	48	1480	1500	NPN	M920
90-35.1720.2	0.5~5	35	56	1720	1740	NPN	M922
90-35.1960.2	0.5~5	35	64	1960	1980	NPN	M923
91-20.160.1	1~10	20	8	160	180	PNP	M901
91-20.280.1	1~10	20	16	280	300	PNP	M904
91-20.400.1	1~10	20	24	400	420	PNP	M906
91-20.520.1	1~10	20	32	520	540	PNP	M908
91-20.640.1	1~10	20	40	640	660	PNP	M909
91-20.760.1	1~10	20	48	760	780	PNP	M911
91-20.880.1	1~10	20	56	880	900	PNP	M913
91-20.1000.1	1~10	20	64	1000	1020	PNP	M914
91-20.160.2	1~10	20	8	160	180	NPN	M901
91-20.280.2	1~10	20	16	280	300	NPN	M904
91-20.400.2	1~10	20	24	400	420	NPN	M906
91-20.520.2	1~10	20	32	520	540	NPN	M908
91-20.640.2	1~10	20	40	640	660	NPN	M909
91-20.760.2	1~10	20	48	760	780	NPN	M911
91-20.880.2	1~10	20	56	880	900	NPN	M913
91-20.1000.2	1~10	20	64	1000	1020	NPN	M914
91-25.200.1	1~10	25	8	200	220	PNP	M902
91-25.360.1	1~10	25	16	360	380	PNP	M905
91-25.520.1	1~10	25	24	520	540	PNP	M908
91-25.680.1	1~10	25	32	680	700	PNP	M910
91-25.840.1	1~10	25	40	840	860	PNP	M912
91-25.1000.1	1~10	25	48	1000	1020	PNP	M914
91-25.1160.1	1~10	25	56	1160	1180	PNP	M916
91-25.1320.1	1~10	25	64	1320	1340	PNP	M904
91-25.200.2	1~10	25	8	200	220	NPN	M902

Order No.	Sensing range (M)	Minimum sensing object (mm)	Beams	Bar length-A (mm)	Housing length-B (mm)	Output	Drawing No.
91-25.360.2	1~10	25	16	360	380	NPN	M905
91-25.520.2	1~10	25	24	520	540	NPN	M908
91-25.680.2	1~10	25	32	680	700	NPN	M910
91-25.840.2	1~10	25	40	840	860	NPN	M912
91-25.1000.2	1~10	25	48	1000	1020	NPN	M914
91-25.1160.2	1~10	25	56	1160	1180	NPN	M916
91-25.1320.2	1~10	25	64	1320	1340	NPN	M918
91-30.240.1	1~10	30	8	240	260	PNP	M903
91-30.440.1	1~10	30	16	440	460	PNP	M907
91-30.640.1	1~10	30	24	640	660	PNP	M909
91-30.840.1	1~10	30	32	840	860	PNP	M912
91-30.1040.1	1~10	30	40	1040	1060	PNP	M915
91-30.1240.1	1~10	30	48	1240	1260	PNP	M917
91-30.1440.1	1~10	30	56	1440	1460	PNP	M919
91-30.1640.1	1~10	30	64	1640	1660	PNP	M921
91-30.240.2	1~10	30	8	240	260	NPN	M903
91-30.440.2	1~10	30	16	440	460	NPN	M907
91-30.640.2	1~10	30	24	640	660	NPN	M909
91-30.840.2	1~10	30	32	840	860	NPN	M912
91-30.1040.2	1~10	30	40	1040	1060	NPN	M915
91-30.1240.2	1~10	30	48	1240	1260	NPN	M917
91-30.1440.2	1~10	30	56	1440	1460	NPN	M919
91-30.1640.2	1~10	30	64	1640	1660	NPN	M921
91-35.280.1	1~10	35	8	280	300	PNP	M904
91-35.520.1	1~10	35	16	520	540	PNP	M908
91-35.760.1	1~10	35	24	760	780	PNP	M911
91-35.1000.1	1~10	35	32	1000	1020	PNP	M914
91-35.1240.1	1~10	35	40	1240	1260	PNP	M917
91-35.1480.1	1~10	35	48	1480	1500	PNP	M920

Order No.	Sensing range (M)	Minimum sensing object (mm)	Beams	Bar length-A (mm)	Housing length-B (mm)	Output	Drawing No.
91-35.1720.1	1~10	35	56	1720	1740	PNP	M922
91-35.1960.1	1~10	35	64	1960	1980	PNP	M923
91-35.280.2	1~10	35	8	280	300	NPN	M904
91-35.520.2	1~10	35	16	520	540	NPN	M908
91-35.760.2	1~10	35	24	760	780	NPN	M911
91-35.1000.2	1~10	35	32	1000	1020	NPN	M914
91-35.1240.2	1~10	35	40	1240	1260	NPN	M917
91-35.1480.2	1~10	35	48	1480	1500	NPN	M920
91-35.1720.2	1~10	35	56	1720	1740	NPN	M922
91-35.1960.2	1~10	35	64	1960	1980	NPN	M923

Type	Socket Order No.					
I	C	02	L	5	C	12
L	C: Cable	Length 02: 2M 05: 5M 10: 10M	Connecter I: Straight L: Angled	Core 4: 4 5: 5	Material R: PUR C: PVC	Socket size 12: M12

ema Automation

- Capacitive Proximity Sensors
- Inductive Proximity Sensors
- Photoelectric Sensors
- Flow Sensors
- Temperature Sensors
- Pressure Sensors
- Speed Monitor
- AS-Interface

META Instrumentation

- 01 Series 16mm Control Switches
- 02 Series 22/25/30mm Control Switches
- 04 Series Float Level Switches
- 05 Series Multi-Layer LED Light Tower
- 06 Series Rotating Paddle Level Switches
- 07 Series Vibrating Fork Level Limit Switches
- 08 Series Encoders
- 09 Series Area Light Curtains

Linking your system

More infomation please visit us: **www.ema-electronic.com**

ema

ema Electronics Ltd.
info@ema-electronic.com

We reserve the right to change technical data without prior notice

Cata.NO.:Cema08EN-a